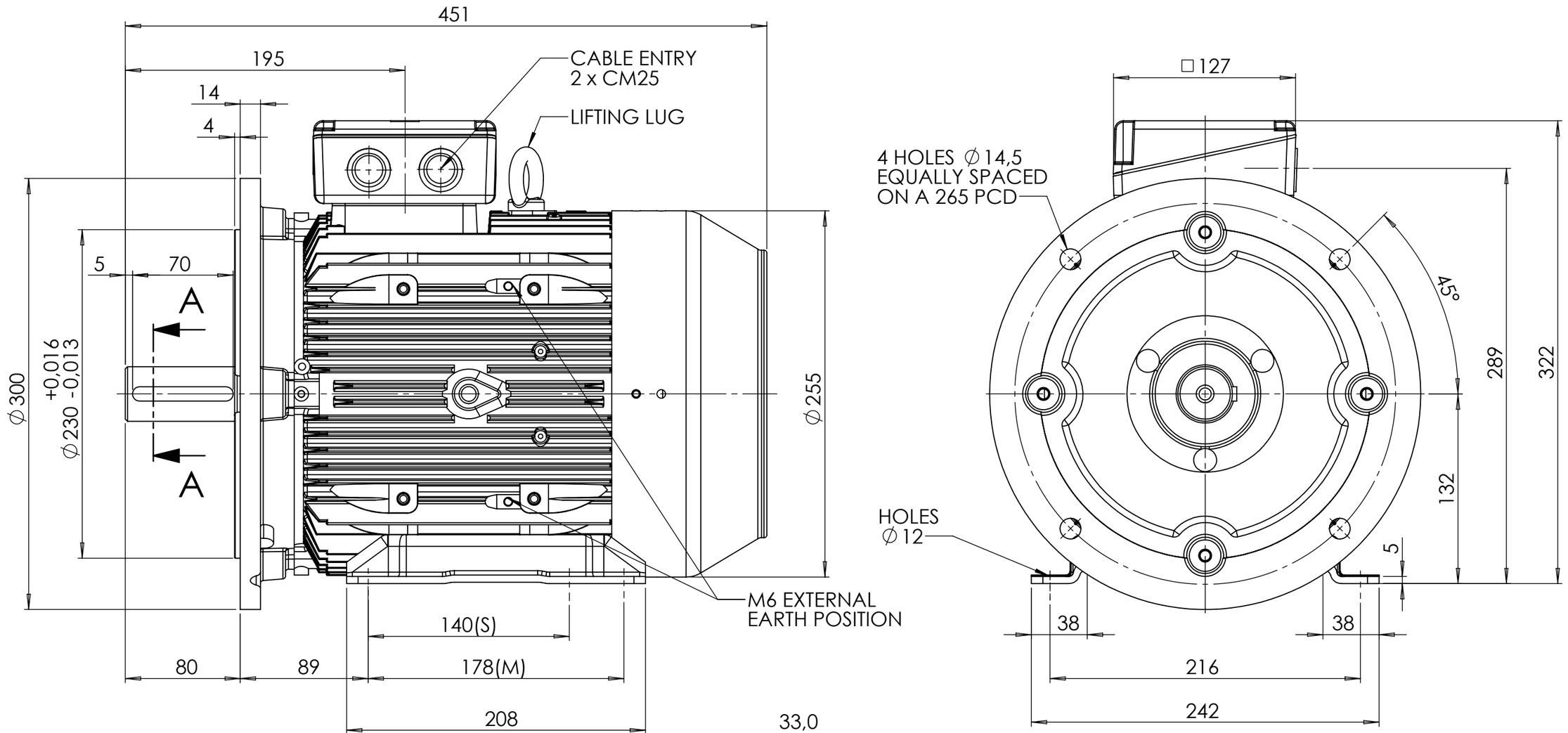

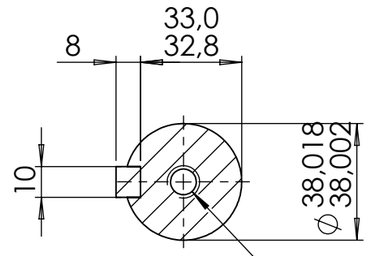

A-A

1 : 2

TERMINAL BOX POSITION:
-CAN BE ARRANGED AT EITHER 9, 12 OR 3 O'CLOCK.
-STANDARD TERMINAL BOX POSITION IS 12 O'CLOCK AS SHOWN.
CABLE ENTRIES:
-TERMINAL BOX CAN BE ROTATED AT 90° INTERVALS
(CONDUIT ENTRY POSITION SHOWN FOR ILLUSTRATION ONLY.)

ALL MOUNTING DIMENSIONS: ISO 2768-mK ACC TO EN 22768-1/2

ALL DIMENSION IN MILLIMETERS

FIRST ANGLE PROJECTION

BROOK CROMPTON

Produced by Tamel a company of NTB

SHEET SIZE	TITLE
A3	OUTLINE DIMENSIONS OF METRIC STANDARD 3-PHASE MOTOR, TOTALLY-ENCLOSED FAN-COOLED W ALUMINIUM SERIES W-DA132S&M FRAME, D-FLANGE & FOOT MOUNTED.

	NAME	DATE
DRAWN	PGO	02.07.2020
CHECKED	KZ	02.07.2020
SCALE	1:3	

DRG. No.	W-DA132S&M B35 DTD IC411
DRG. REF.	
REVISION:	DATE